Module 7

Explaining Application Services

Copyright © 2024 The Computing Technology Industry Association, Inc. All rights reserved.

Learning Objectives

- Explain the importance of time synchronization and the role of NTP.
- Explain the use of web, file/print, and database services.
- Explain the use of email and voice services.
- Explain how high availability services are provisioned using redundancy and load balancing.

Copyright © 2024 The Computing Technology Industry Association, Inc. All rights reserved.

Lesson 7.1

Application Security and Time Synchronization

Copyright © 2024 The Computing Technology Industry Association, Inc. All rights reserved.

Transport Layer Security (TLS)

Encryption	• Encrypts the data
Authentication	• Confirm server identity with certificates
Integrity	• Ensures data is unchanged

Copyright © 2024 The Computing Technology Industry Association, Inc. All rights reserved.

TLS Handshake

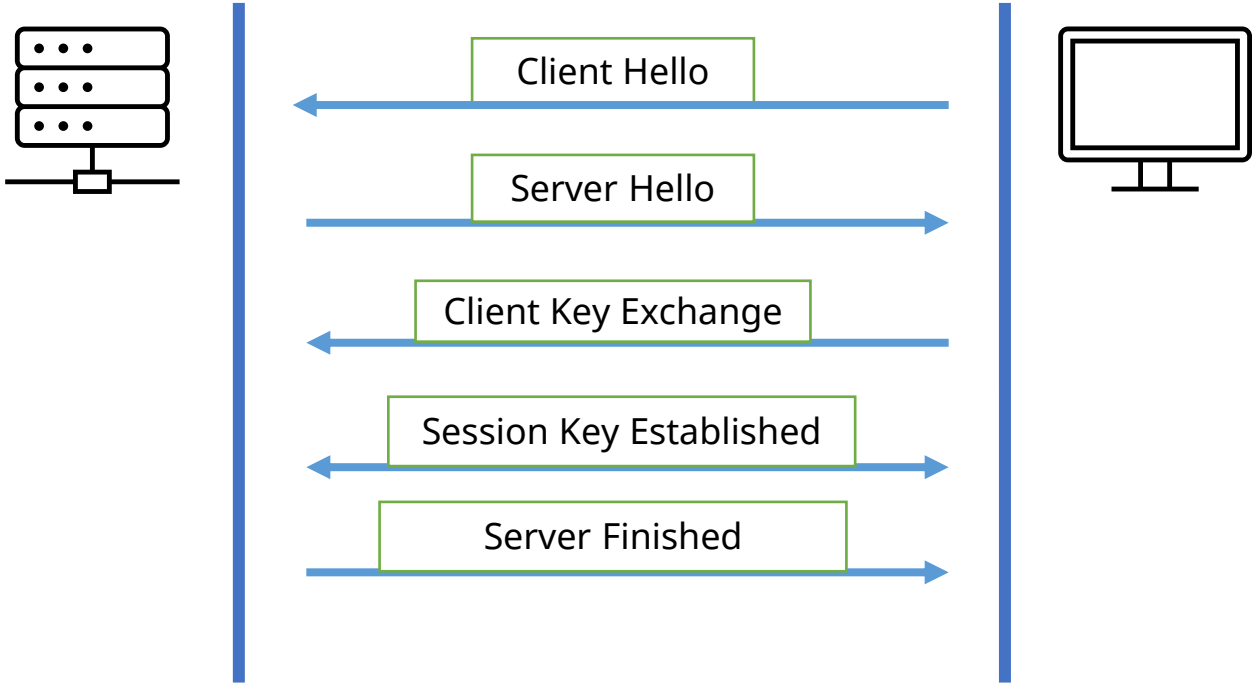

Copyright © 2024 The Computing Technology Industry Association, Inc. All rights reserved.

Network Time Protocol (NTP)

Purpose	Operation	Hierarchy	Synchronization	Algorithms
• Synchronizes system clocks to Coordinated Universal Time (UTC)	• Operates over networks using the UPD protocol on port 123	• Organizes devices in a hierarchical manner, indicating distance from the clock	• Synchronizes devices by sending timestamped messages to/ from network peers	• Uses complex algorithms to account for network delay and jitter

Copyright © 2024 The Computing Technology Industry Association, Inc. All rights reserved.

NTP Diagram

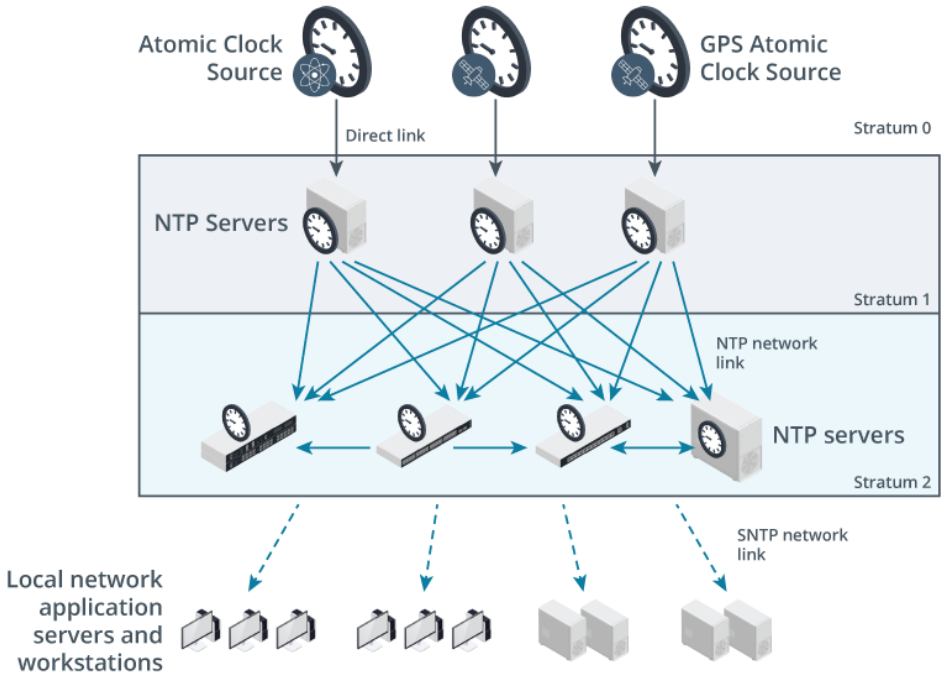

Copyright © 2024 The Computing Technology Industry Association, Inc. All rights reserved.

Precision Time Protocol (PTP)

Applications	Clock types	Roles
• Industrial processes • 5G cellular data • Medical devices • Financial services • Broadcasting	• Grandmaster clock • Boundary clock • Ordinary clock	• TimeTransmitter • TimeReceiver • Grandmaster • Boundary

Copyright © 2024 The Computing Technology Industry Association, Inc. All rights reserved.

Activity: Fill in the Blank

1. TLS _____ the data to hide it from anyone who might intercept it.
2. _____ is used to synchronize clocks to Coordinated Universal Time.
3. The _____ clock is the main time source in the PTP domain.

Copyright © 2024 The Computing Technology Industry Association, Inc. All rights reserved.

Lesson 7.2

Web, File/Print, and Database Services

Copyright © 2024 The Computing Technology Industry Association, Inc. All rights reserved.

Hyper Text Transfer Protocol (HTTP)

Purpose

- Protocol for fetching resources (HTML documents, images, and videos) from the web

Foundation

- Basis of any data exchange on the web

Copyright © 2024 The Computing Technology Industry Association, Inc. All rights reserved.

Hyper Text Transfer Protocol (HTTP)

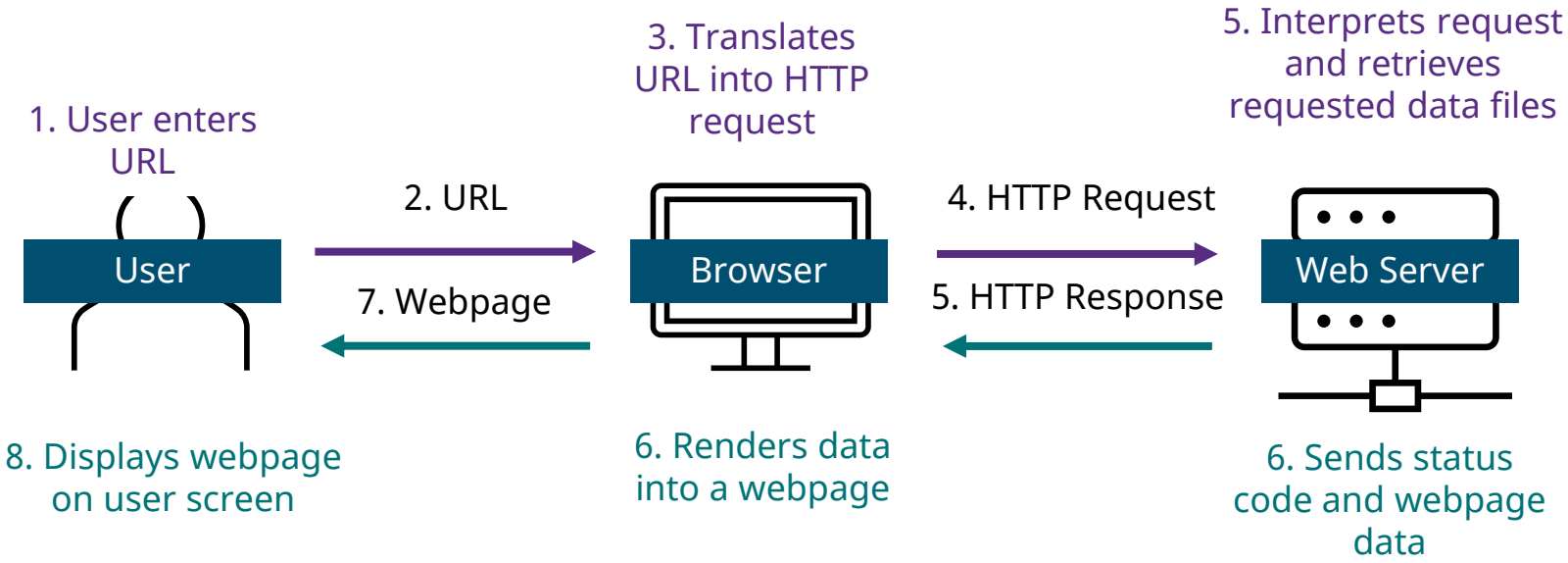

Copyright © 2024 The Computing Technology Industry Association, Inc. All rights reserved.

HTTP Secure (HTTPS)

HTTP

- Foundational protocol for the Internet
- Does not encrypt data
- Uses port 80
- URL begins with http://

HTTPS

- Secure version of HTTP
- Uses TLS (SSL) encryption
- Uses port 443
- URL begins with https://

Copyright © 2024 The Computing Technology Industry Association, Inc. All rights reserved.

File Transfer Protocol (FTP)

FTP Server Authentication

- Require users to provide credentials
- Some allow anonymous access

Channels

- Command channel for instructions and response
- Data channel for transferring files

Transfer Modes (Active and Passive)

- Active: server connects back to the client to transfer data
- Passive: client initiates command/data connections to avoid firewall issues

Copyright © 2024 The Computing Technology Industry Association, Inc. All rights reserved.

FTP Diagram

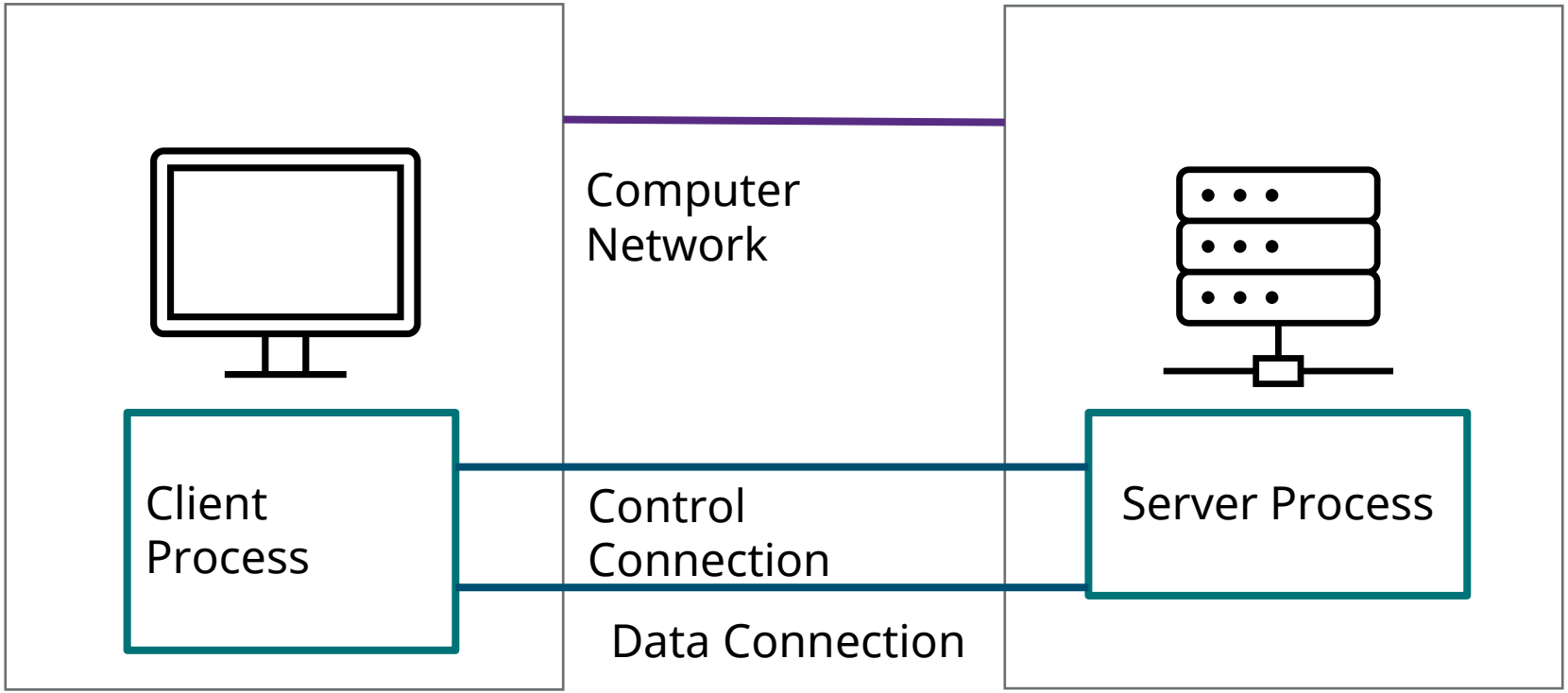

Copyright © 2024 The Computing Technology Industry Association, Inc. All rights reserved.

Secure File Transfer Protocol (SFTP)

FTP

- Unencrypted data
- Uses two channels
- Uses ports 20 and 21

SFTP

- Encrypted data
- Uses one channel
- Uses port 22

Copyright © 2024 The Computing Technology Industry Association, Inc. All rights reserved.

Server Message Block Protocol (SMB)

SMB Purpose

- Allows computers in the same network to share resources

SMB Usage

- Windows
- Linux using Samba

Copyright © 2024 The Computing Technology Industry Association, Inc. All rights reserved.

SMB Diagram

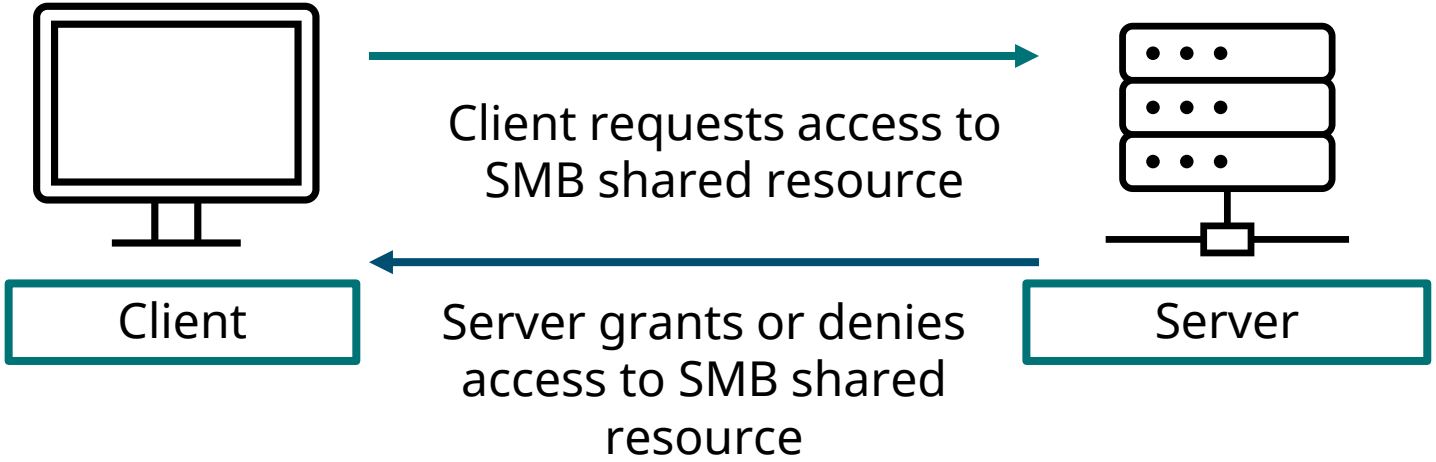

Copyright © 2024 The Computing Technology Industry Association, Inc. All rights reserved.

Network Attached Storage (NAS)

NAS Purpose

- Provides remote file access
- Concurrent resource access for multiple devices

NAS Components

- Processor, memory, and hard drives
- Bespoke OS, usually Linux

Copyright © 2024 The Computing Technology Industry Association, Inc. All rights reserved.

NAS Diagram

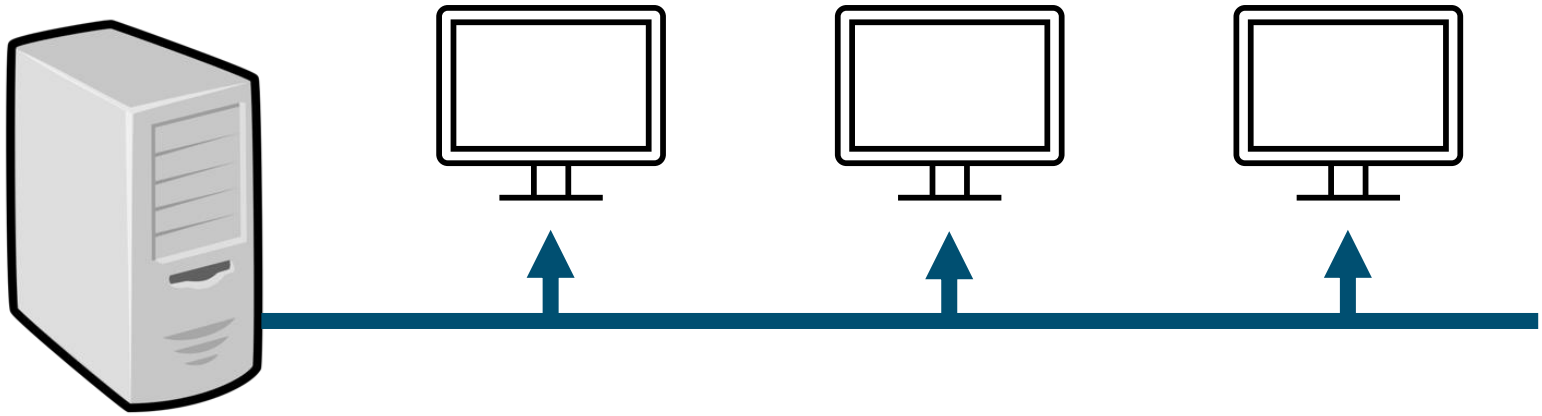

Copyright © 2024 The Computing Technology Industry Association, Inc. All rights reserved.

RDBMS Database Service

Relational Database Management Systems

- Structured storage (tables store data)
- SQL queries to retrieve/update data
- Connected tables link data via unique IDs
- Encryption via TLS

Copyright © 2024 The Computing Technology Industry Association, Inc. All rights reserved.

NoSQL Database Service

NoSQL Databases

- Stores data in different formats (key-value pairs/wide columns)
- Simple Access through APIs over HTTPS
- Scalable Growth (Horizontal scaling)
- Supports wide range of data models

Copyright © 2024 The Computing Technology Industry Association, Inc. All rights reserved.

RDBMS vs NoSQL

RDBMS	NoSQL
Requires predefined schema	Schema-less or dynamic schemas
Vertically scalable	Horizontally scalable
Handles complex queries	Simplicity/speed for specific types of queries

Copyright © 2024 The Computing Technology Industry Association, Inc. All rights reserved.

Activity: Matching

CompTIA

HTTP	Protocol for web communication
FTP	Storage accessible over a network
SMB	Network protocol for file transfer
NAS	System for managing relational databases
RDBMS	Protocol for network file sharing

Copyright © 2024 The Computing Technology Industry Association, Inc. All rights reserved.

Lesson 7.3

Email and Voice Services

Copyright © 2024 The Computing Technology Industry Association, Inc. All rights reserved.

Simple Mail Transfer Protocol (SMTP)

Purpose

- Used to send emails from one server to another

Process

- Routes emails from sender’s email client to recipient’s email server

Security

- Combinable with TLS to encrypt emails during transmission

Ports

- Port 25, port 465 with implicit TLS, port 587 with explicit TLS

Copyright © 2024 The Computing Technology Industry Association, Inc. All rights reserved.

Internet Message Access Protocol (IMAP)

Purpose

- Access and manage email remotely
- Stores emails on server

Function

- Connecting to the mail server
- Synchronization
- Reading emails
- Managing emails

Copyright © 2024 The Computing Technology Industry Association, Inc. All rights reserved.

SMTP and IMAP Diagram

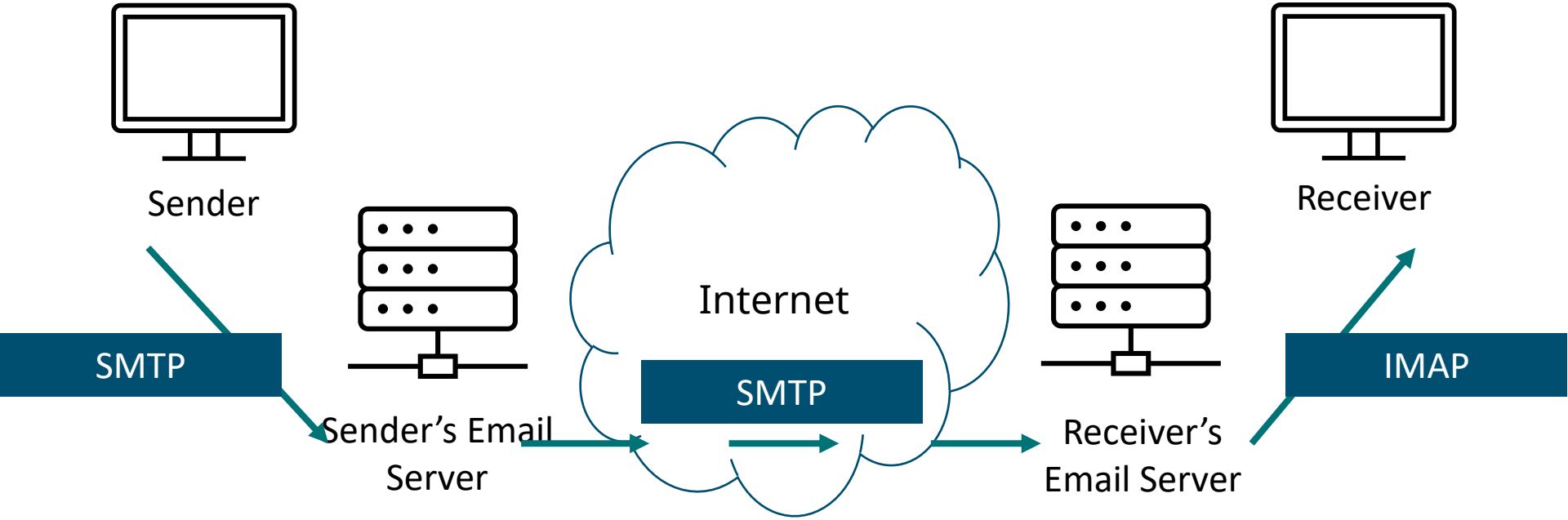

Copyright © 2024 The Computing Technology Industry Association, Inc. All rights reserved.

Voice and Video Services

VOIP	PBX	VoIP-Enabled PBX
• Transmits voice calls over IP networks • Supports voice, video, and multimedia sessions • Supports various devices	• Private Branch Exchange • Connects internal phone lines within an organization • Manages incoming/outgoing calls, voicemail, and call forwarding	• Combines PBX functions with VoIP • Operates over LAN or WAN • Reduces reliance on physical infrastructure

Copyright © 2024 The Computing Technology Industry Association, Inc. All rights reserved.

VoIP Protocols

Real-Time Protocol

- Transports audio/video over the Internet in real time
- Uses even numbered UDP ports for streaming media
- Focuses on the delivery of data

Real-Time Transport Control Protocol (TRCP)

- Provides out-of-band statistics and control information for an RTP session
- Uses the next higher odd-numbered port from RTP port
- Offers feedback on packet delivery, loss, and jitter

Session Initiation Protocol (SIP)

- Initiates, maintains, and terminates real-time communication sessions
- Uses TCP/UDP ports 5060 (non-encrypted) and 5061 (TLS-encrypted)
- Manages call setup and teardown, user location, and messaging.

Copyright © 2024 The Computing Technology Industry Association, Inc. All rights reserved.

Activity: Trivia

- Which protocol allows you to access and manage emails remotely?
- Which protocol is used to send emails from one server to another?

Copyright © 2024 The Computing Technology Industry Association, Inc. All rights reserved.

Lesson 7.4

Disaster Recovery and High Availability

Copyright © 2024 The Computing Technology Industry Association, Inc. All rights reserved.

Disaster Recovery Concepts

Disaster Recovery Plan (BRP)

- Guidelines and procedures
- Preparation and prevention

Tabletop Exercises

- Simulation
- Constrictive learning

Validation Tests

- Functional testing
- Scenario testing
- Full-scale testing

Business Continuity Plan (BCP)

- BCP team
- Business impact analysis (BIA)
- Crisis communication plan

Copyright © 2024 The Computing Technology Industry Association, Inc. All rights reserved.

Disaster Recovery Metrics

High availability (HA)	• Ensures consistent system uptime
Maximum tolerable downtime (MTD)	• Longest disruption without severe impact
Recovery time objective (RTO)	• Time to restore services after disruption
Work recovery time (WRT)	• Time to confirm system/data integrity post-recovery
Recovery point objective (RPO)	• Maximum acceptable loss after an event

Copyright © 2024 The Computing Technology Industry Association, Inc. All rights reserved.

Disaster Recovery Sites

Cold Site

Warm Site

Hot Site

Copyright © 2024 The Computing Technology Industry Association, Inc. All rights reserved.

Fault Tolerance and Redundancy

Fault Tolerance

- Maintains operation despite component failure
- Operates at reduced capacity instead of shutting down
- Uses replication, error checking, and failover

Redundancy

- Duplicates key components for higher reliability
- Offers backup paths/capacity for failed components
- Prevents system collapse from any single failure

Copyright © 2024 The Computing Technology Industry Association, Inc. All rights reserved.

Key Performance Indicators (KPIs)

Mean time between failures (MTBF)

- Average time between system failure
- Total operational time divided by # of failures

Mean time to failure (MTTF)

- Expected lifespan before a non-repairable system fails
- Total operational time until failure divided by # of units

Mean time to repair (MTTR)

- Average time to fix and restore a failed system
- Total time spent on repairs divided by the number of repairs

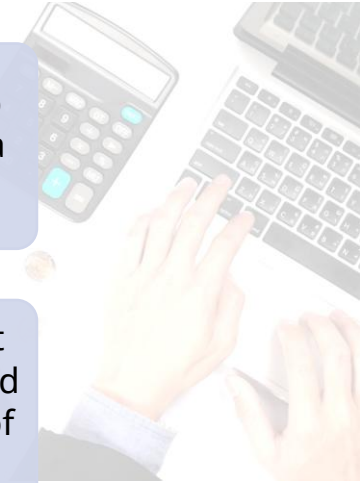

Copyright © 2024 The Computing Technology Industry Association, Inc. All rights reserved.

Load Balancers

Purpose

- Distributes network traffic across multiple servers
- Improves application performance and reliability

Functionality

- Acts as a “traffic cop” to route client requests
- Ensures no single server is overworked

Benefits

- Reduces downtime and increases scalability
- Provides redundancy/ efficiency in handling requests

Types

- Can be hardware-based or software-based
- Uses various algorithms like Round Robin, Least Connections, etc.

Copyright © 2024 The Computing Technology Industry Association, Inc. All rights reserved.

Load Balancer Diagram

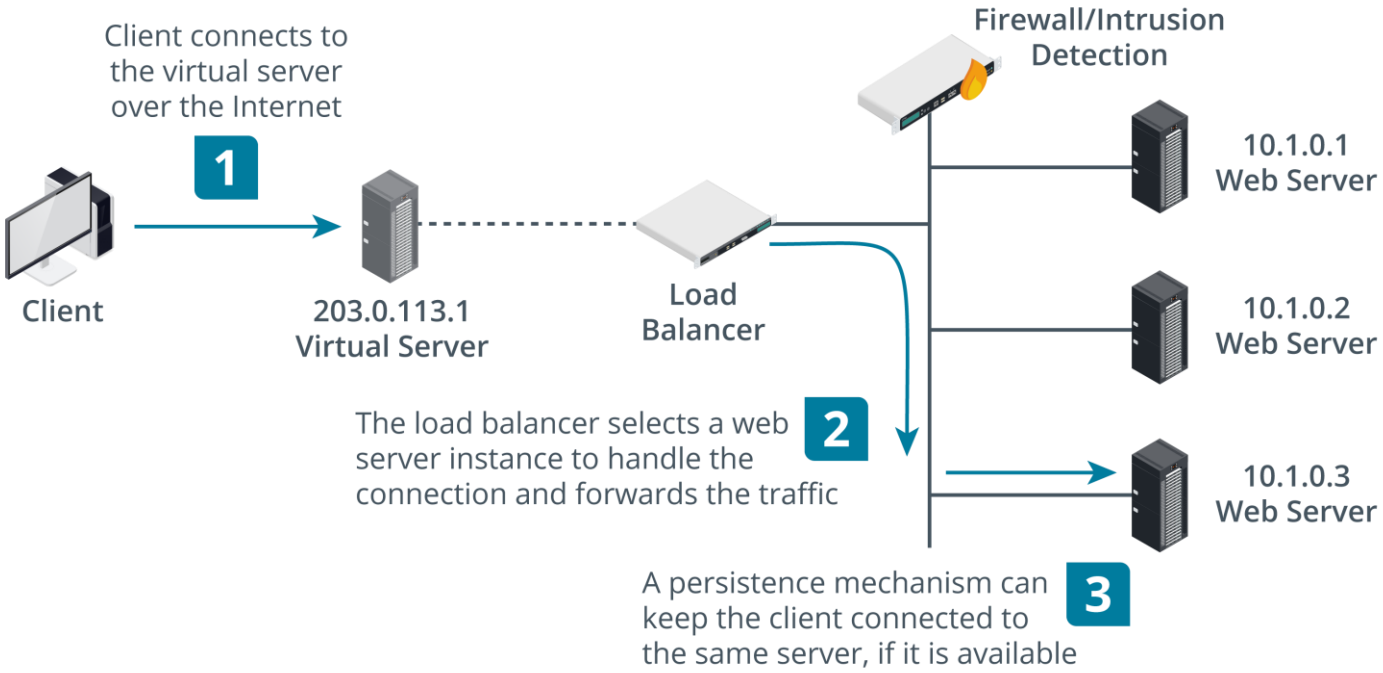

Copyright © 2024 The Computing Technology Industry Association, Inc. All rights reserved.

High Availability Clusters

High Availability Clusters Definition

- Systems that ensure continuous operation and minimize downtime via redundant components and failover mechanisms

High Availability Clusters Function

- Ensure continuous service/minimal downtime for critical applications
- Automatically manage failovers to maintain operations
- Monitor system health and provide redundancy
- Ideal where uptime is crucial (e.g., databases, business services)

Copyright © 2024 The Computing Technology Industry Association, Inc. All rights reserved.

High Availability Clusters Diagram

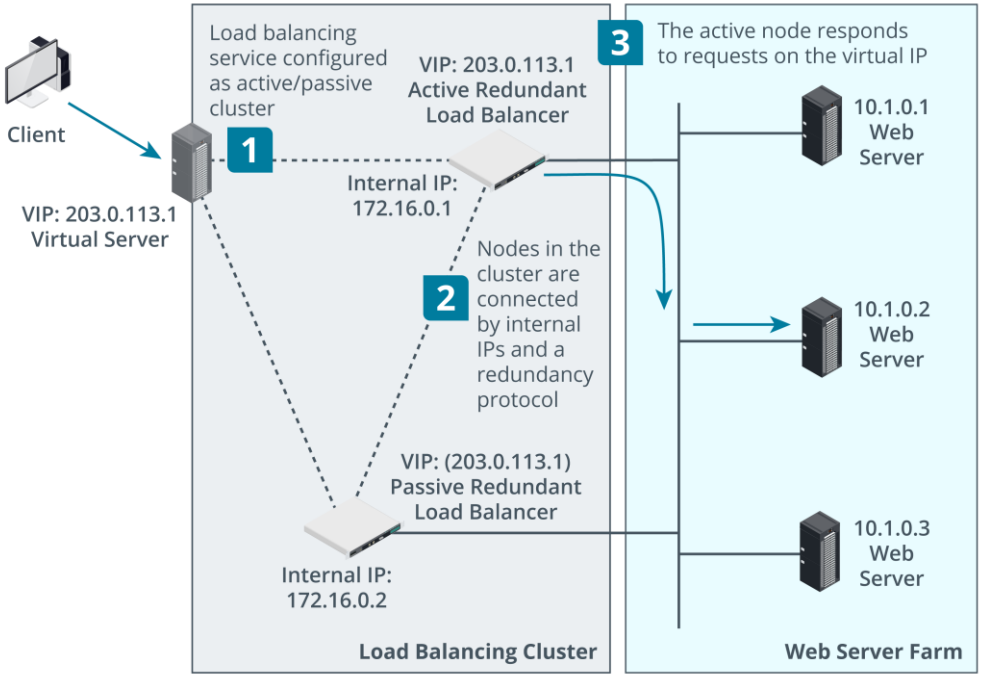

Copyright © 2024 The Computing Technology Industry Association, Inc. All rights reserved.

First Hop Redundancy

First Hop Redundancy Definition

- Ensures uninterrupted network service by automatically switching to a backup gateway if the primary one fails

Functions

- Ensures uninterrupted gateway availability
- Multiple routers prevent single points of failure
- Quick failover with protocols like HSRP/VRRP
- Maintains network access and reliability

Copyright © 2024 The Computing Technology Industry Association, Inc. All rights reserved.

First Hop Redundancy Diagram

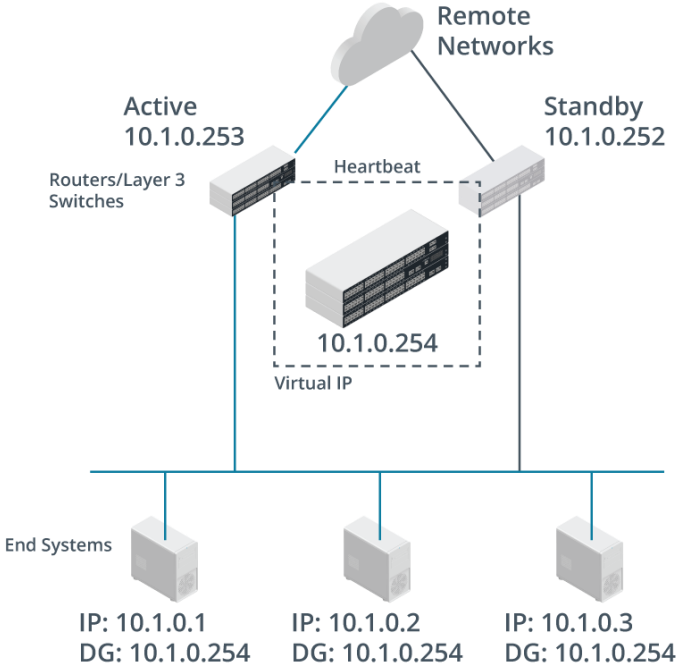

Copyright © 2024 The Computing Technology Industry Association, Inc. All rights reserved.

Activity: Hot, Warm, or Cold?

A financial services company that processes high-volume transactions cannot afford more than a few minutes of downtime. Any downtime can result in significant financial loss and erosion of customer confidence.

Which type of recovery site would be best for their situation?

Cold Site

Warm Site

Hot Site

Copyright © 2024 The Computing Technology Industry Association, Inc. All rights reserved.

Summary

- **HTTPS everywhere**: Implement HTTPS (TLS/443) on web servers for secure communication
- **Secure file transfer**: Utilize secure protocols like SFTP/FTPS (SSL/TLS) for file transfers
- **Limit unencrypted sharing**: Restrict unencrypted services (SMB) to trusted internal networks
- **Plan for disruptions**: Develop DR/HA plans with dedicated resources for business continuity

Copyright © 2024 The Computing Technology Industry Association, Inc. All rights reserved.